LAB 9: OP AMPS III

UC Berkeley Donald A. Glaser Instrumentation Laboratory

GENERAL GUIDELINES

- **You should complete the prelab questions before beginning benchwork.** Information required to answer the prelab questions can be found in the background material at the beginning of the lab, from lecture, in the stated references, and on the web.

- **Please ask questions of the GSIs or professor(s)** at any time during the course!

- Wikipedia has many useful and informative articles. You are strongly encouraged to use Wikipedia and other online resources to better understand any material.

- **Problems with this icon need to be checked off by GSIs.**

- **Problems with this icon indicate that you should take a picture of the circuit built for the problem and include it in your report. Include your student ID, with name clearly visible, in the photo.**

- **Problems with this icon indicate that you should take a screenshot of the WaveForms oscilloscope.**

- **Important Safety Habits**
  - Before stopping for the day or taking a break, make sure you power down all equipment.
  - When possible, use the switches for the power supplies to power down the circuit when changing the wiring. It is easy to accidentally short wires and damage your equipment or electronic components.
  - Never place food or drink next to any apparatus. Accidental spills can damage or destroy the equipment and your experiment.

1. LEARNING GOALS

(1) Open-loop gain suppression and stability
  (a) Gain-bandwidth product
  (b) Why is this necessary?
(2) Op-amp limitations:
  (a) Gain-bandwidth product (finite open-loop gain and slew rate),
  (b) Input imperfections (input voltage offset, input bias current, input offset current),
  (c) Output imperfections (finite output voltage swing, finite output current).
  (d) Amplifier noise (voltage noise, Johnson noise from resistors)
(3) Op amp circuit amplifications (e.g. op amp rectifier)
(4) Measuring op amp noise & limitations

2. LAB BACKGROUND READING

Sedra and Smith	Chapter 2 skim Chapter 4, 9, 10
"The Art of Electronics", Horowitz & Hill, 3rd edition	Chapter 4 skim Chapters 2, 8.1

Table 1. Additional Background References

In many closed-loop circuits with negative feedback, op amps behave perfectly in the sense that the op amp golden rules are obeyed. For example, the exercises in Labs 7 and 8 should have convinced you that op amps behave ideally in a wide range of useful circuits! However, op amps have imperfections that break the golden rules in ways that can be significant. Moreover, some circuits are highly susceptible to op amp imperfections, or are designed to operate under positive feedback, wherein both cases the op-amp golden rules no longer apply.

This week's lab will let you build circuits that confront and expose the limits of the "ideal op-amp," where golden rules no longer apply. These circuits will also investigate methods of curing or working around some of these imperfections. The most important op amp imperfections can be divided into four categories, which we will explore below.

2.1. **Feedback Oscillations and Frequency-Dependent Op Amp Gain.** Op amp frequency and phase behavior is quite complicated. All op amps consist of several gain stages, and the gain of each stage will decline at high frequencies because of parasitic capacitances inside the transistors of each stage. The op amp can be modeled as a perfect, frequency-independent, high-gain differential amplifier (marked as G_0 in Fig. 1), followed by a series of active low-pass filters (marked as f_1, f_2, etc.), each filter representing the frequency response of one gain stage of the op amp.

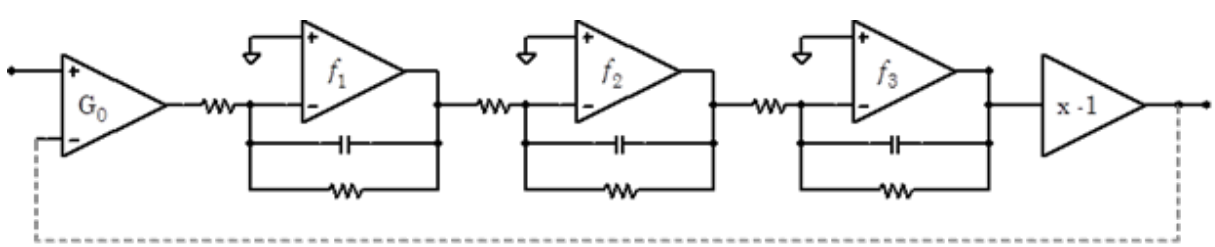

Figure 1. An op amp modeled as a sequence of a perfect amplifier and perfect active low-pass filters. Note that the true physical op amp is the full combination of these perfect amplifiers.

The stages act successively; the net gain is the product of all the gains, and the net phase shift is the sum of all the phase shifts. The low-pass cutoff frequency for each stage is similar, typically around 10 MHz. Remember that the phase shift of an RC filter driven above its cutoff frequency approaches $-90°$; thus the net phase shift at sufficiently high frequencies will cross $-180°$ on its way to $-270°$. At the $-180°$ crossing point, the inverting input effectively becomes a non-inverting input, and the feedback, which is hooked up to the now non-inverting V_- input, changes from negative to positive. **Like any other circuit with positive feedback, the amplifier will oscillate if the gain is equal to or greater than unity.**

We define $A(\omega)$ as the op amp's open-loop gain, and the gain of the feedback circuit as $\beta(\omega)$. Careful analysis of a high-gain op amp whose low-pass cutoffs are all at approximately the same frequency shows that if the total feedback gain, $A(\omega)\beta(\omega)$, is ≥ 1 with a phase shift of $-180°$, the op amp will generally be unstable, and the instability will result in *oscillations*. The *Nyquist stability criterion* can be used to evaluate the stability of dynamical systems under closed-loop feedback, and in particular applies to linear time-invariant control systems (i.e. the feedback loop is linear, and the its response to an input signal at a time t will be the same as its response at a later time $t + \tau$).

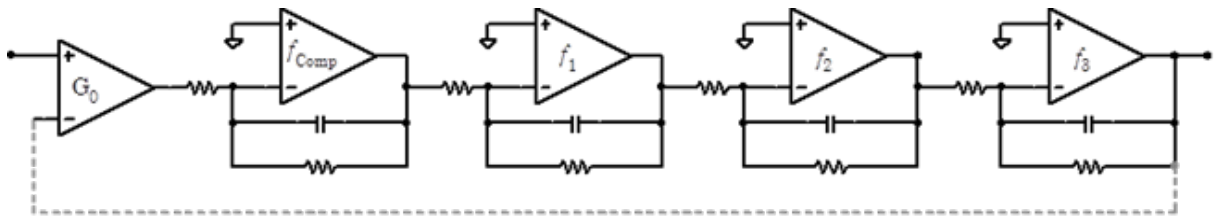

FIGURE 2. An op amp model, including a compensator filter.

To prevent oscillations, most op amps, including the LF356, are *compensated*. A compensation low-pass filter is added to ensure that the gain is less than unity at the $-180°$ crossing point. The compensation filter must be designed to cut in at a quite a low frequency: typically, at less than 100 Hz. Thus the frequency response of the op amp is almost entirely set by this compensation filter (see Fig. 3).

As it significantly degrades the frequency response of the op amp, compensation is a steep price to pay for stability. Compensation also decreases the amp's slew rate.

Detailed analysis of the stability problem shows that oscillations are hardest to avoid for unity gain followers; high-gain amplifiers are much less likely to oscillate. Special uncompensated op amps are available which have both higher frequency responses and faster slew rates but can only be used in high-gain circuits. Some op amps are available in both compensated and uncompensated forms; for example, an AD849J is an uncompensated version of the compensated AD847J. AD849Js are only stable when used with gains greater than 25, but are about 15 times faster in terms of slew rate.

With only a single pole dominating the transfer function, we can treat the op amp as a large DC gain A_0 rolled off by a single low-pass pole with 3 dB frequency ω_0. Therefore, the complex transfer function for the op amp is

$$A(\omega) = \frac{A_0\omega_0}{\omega_0 + j\omega}$$

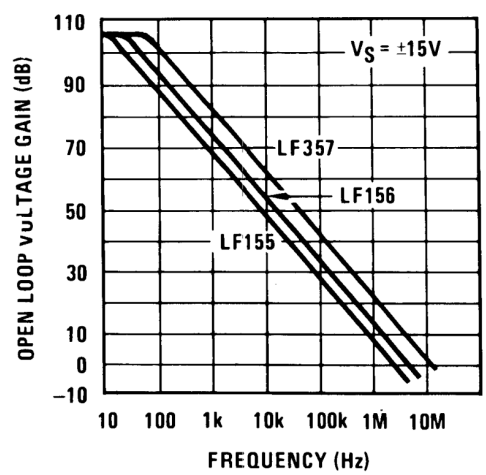

FIGURE 3. Open-loop gain in decibels as a function of frequency. Taken from Figure 24 of the LF356 data sheet.

The product of the open-loop gain at DC, multiplied by the 3 dB frequency of the compensator pole is called the *gain-bandwidth product* (GBW):

$$\text{GBW} = A_0 f_0 = A_0 \frac{\omega_0}{2\pi}$$

In this single-pole model, the GBW completely defines the gain of the op amp at high frequencies!

Although an ideal op amp has an infinite open-loop (i.e. no feedback) gain, all practical op amps have finite open-loop gains, typically around 10^6 at DC. So long as the closed-loop (i.e. with feedback) gain is substantially lower than the open-loop gain, say by a factor of 10^3, the errors due to the finite gain will be negligible. This criterion is easy to meet at DC but is problematic at higher frequencies because the open-loop gain decreases with increasing frequency. Fig. 3 is a log-log plot of the open-loop gain (decibel scale) versus frequency taken from the LF356 data sheet. On this plot, 100 dB corresponds to a voltage gain of 10^5. The open-loop gain of the LF356 is flat at $G_0 \sim 5 \times 10^5$ out to only $f_0 \sim 10\,\text{Hz}$, and then decreases by 6 dB per octave[1]. For the LF356, the GBW is approximately 5 MHz.

In Appendix A, we determined the bandwidth of inverting and non-inverting op amp amplifier configurations. For an op amp like the LF356, where the gain is rolled off by a single dominant pole, we can solve for the bandwidth $\omega_{3\,\text{dB}}$, which we characterize as the frequency where the closed-loop gain decreases by 3 dB.

For the inverting amplifier configuration, the ideal closed-loop gain is given by the ratio of resistors $G_C^{\text{ideal}} = -Z_2/Z_1$. As shown in Appendix A.1, the 3 dB bandwidth of the amplifier is given by Eq. A.13:

$$f_{3\,\text{dB}} = \frac{f_0 A_0}{-G_c^{\text{ideal}} + 1} = \frac{\text{GBW}}{-G_c^{\text{ideal}} + 1}$$

For the non-inverting configuration, the ideal closed-loop gain is determined by the feedback network $G_c^{\text{ideal}} = 1 + \frac{R_2}{R_1}$. As shown in Appendix A.2, the 3 dB bandwidth of the non-inverting amplifier is given by Eq. A.21:

$$f_{3\,\text{dB}} = \frac{f_0 G_0}{G_c^{\text{ideal}}} = \frac{\text{GBW}}{G_c^{\text{ideal}}}$$

At low gain, the bandwidth of the non-inverting configuration is superior. For example, a non-inverting follower has twice the bandwidth of an inverting follower. However, for $G_c^{\text{ideal}} \gg 1$, the two expressions become identical and equal to that for the non-inverting configuration. In this limit, the bandwidth can be determined by simply dividing the GBW by the closed-loop gain. However, for precision applications, operating near the 3 dB frequency is not acceptable and the usable bandwidth can be considerably less. For example, while the 3 dB bandwidth of a LF356-based amplifier with a gain of 100 is $f_{3\,\text{dB}} = 50\,\text{kHz}$, the gain would be accurate to 1% only below 7 kHz.

2.2. **Slew Rate.** The maximum rate at which an op amp can change its output is called its *slew rate*. For example, when fed a 10 V peak-to-peak square wave, an op amp with a 20 V/µs slew rate (in a follower circuit) will change from one level to the other in $10\,\text{V}/20\,\frac{\text{V}}{\mu\text{s}} = 0.5\,\mu\text{s}$. As shown in Fig. 4, this can lead to distortions in the output. Slew rates are normally in the range of 1 to 1000 $\frac{\text{V}}{\mu\text{s}}$. The slew rate for the LF356 is a relatively modest 12 $\frac{\text{V}}{\mu\text{s}}$. Though related, the slew rate of an op amp is not equivalent to its gain-frequency response. An op amp with a high small-signal frequency response at low amplitude may have a poor slew rate, and would not be useful with high-amplitude, high-frequency signals.

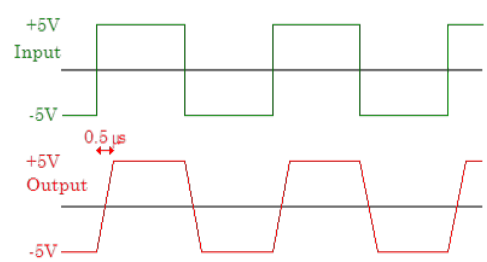

FIGURE 4. Visualization of slew rate.

2.3. **Input Imperfections.**

Voltage Offset, V_{OS}. The transistors and other circuitry in an op amp's differential input stage do not match perfectly. Consequently, the output of the op amp is not precisely zero when $V_+ = V_-$. The *input offset voltage* V_{OS} is the input voltage differential $V_+ - V_-$ required to produce exactly zero output voltage, as in Fig. 5. The input offset voltage varies between devices. Typical and maximum values of V_{OS} are given on spec sheets for each variety of op amp.

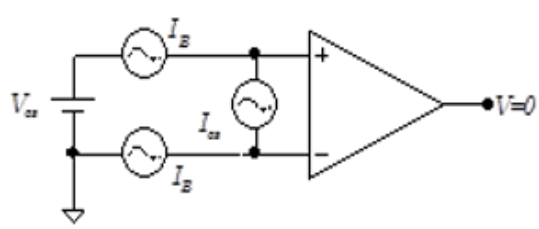

FIGURE 5. Op amp model for input imperfections.

[1]The term *octave* originates from octaves in music. Just like the two notes in an octave are a multiplicative factor of two apart, an octave refers to a doubling of frequency—decreasing by 6 dB per octave means the gain decreases by 6 dB every time the frequency doubles. Similarly, you also hear of dB per *decade*, where a decade refers to a factor of 10.

Input Bias Current, I_B. All op amp inputs act as sinks or sources of some current. The average of the currents sunk or sourced by the two inputs is called the *input bias current* I_B. It is independent of any currents due to the op amp's finite input resistance; the inputs will attempt to sink or source current even when grounded. Potential differences induced by the input currents as they flow through the input and feedback resistors can introduce significant output errors. Like the offset voltage, the current bias varies between devices. For FET input amplifiers like the LF356, the input bias current is very low and only needs to be considered for very high source impedances.

Input Offset Current, I_{OS}. The difference between the current sunk or sourced by the two inputs is called the *input offset current* I_{OS}. The offset current is typically one-half to one-tenth as large as the input bias current. Some circuits make use of the fact that the input offset current is small to balance the impedance at the inputs and remove the common offset from the input bias current. For FET op amps like the LF356, this is usually not necessary.

2.4. **Output Imperfections.**

Finite Output Voltage Swing. As we saw in Lab 8, the output voltage of an op amp cannot exceed its power supply voltages; for many op amps, like the LF356, it will be up to a few volts less than the power supply voltage. The golden rules will be violated if the feedback network requires the output to swing beyond these limits. We have already explored examples of this limitation in previous labs, such as the relaxation oscillator.

Finite Current. The op amp output current is limited to some finite value, typically around $\pm 25\,\mathrm{mA}$ for the LF356. Demanding more current than the op amp can supply will mean that feedback cannot be maintained, and the golden rules will not be satisfied.

Unlike the other imperfections, this current limit is a deliberate choice of the op amp circuitry[2], such that the output can be safely shorted; some op amps, however, are not protected and can be blown out by shorting their outputs.

2.5. **Amplifier Noise.**

Ideally, an op amp's output would be constant when its inputs are held at fixed values. Unfortunately, the outputs of all practical op amps fluctuate, and only averages to a fixed value. These fluctuations are considered *noise*. Noise degrades circuit performance; high noise levels can overwhelm a circuit's desired signal. For many noise sources, the fluctuation amplitudes are Gaussian distributed meaning that in the frequency domain, the noise has no dominant or characteristic frequency. Said another way, all frequencies have the same noise power. This particular type of noise is called *white noise*.

Voltage Noise. Op amps typically produce white noise above a low frequency excess called $1/f$ noise. For the LF356, the noise is white above 100 Hz. One op amp noise component is the voltage noise e_n. Voltage noise is specified in units of volts per square root hertz ($\mathrm{V}/\sqrt{\mathrm{Hz}}$). We can model the physical op amp as a noiseless op amp whose inputs are in series with a white noise source of RMS amplitude $e_n\sqrt{\mathrm{BW}}$, where BW is the frequency bandwidth over which the output is examined. For example, a typical op amp might have a voltage noise of $10\,\mathrm{nV}/\sqrt{\mathrm{Hz}}$. Used in a circuit with a bandwidth of 100 Hz to 10 kHz, the total noise would be $10\,\mathrm{nV}/\sqrt{\mathrm{Hz}} \times \sqrt{10^4\,\mathrm{Hz} - 10^2\,\mathrm{Hz}} \approx 10^{-6}\,\mathrm{V_{RMS}} = 1\,\mu\mathrm{V_{RMS}}$.

Johnson Noise. The resistors used in an op amp's external circuit are also noisy. *Resistor noise*, also called *Johnson noise*, results from the thermal fluctuations of the resistor's electrons. The RMS voltage noise from a resistor R at temperature T is given by $V_{\mathrm{rms}} = \sqrt{4k_BTR\Delta f}$, where k_B is Boltzmann's constant, and Δf is the bandwidth of the measurement (i.e. the total frequency band over which noise can enter into your measurement). Consider the example from Wikipedia: for a $3\,\mathrm{k\Omega}$ resistor at room temperature (300 K), over a measurement bandwidth of 20 kHz, the Johnson noise would be $\sqrt{4k_B(300\mathrm{K})(3\mathrm{k\Omega})(20\mathrm{kHz})} \approx 1\,\mu\mathrm{V_{RMS}}$.

2.6. **Bipolar Junction Transistors.**

Bipolar junction transistors (BJTs) are the most common type of discrete transistor. Built with two adjacent junctions, bipolar transistors come in two flavors: NPN transistors consist of a p-type semiconductor layer sandwiched between two n-type layers, and PNP transistors consist of a central n-type layer sandwiched between two p-type layers. The central layer is called the *base* and is the controlling lead. The two outer layers are the *emitter* and *collector*. For a BJT, the **collector** is analogous to a JFET transistor's **drain**; the

[2] It's not a bug, it's a feature!

base is analogous to a JFET's **gate**; and the **emitter** is analogous to a JFET's **source**. BJT circuit schematics are shown in Fig. 6a. In schematics, the two BJT types (NPN vs. PNP) are differentiated by the small arrow on the emitter, which indicates the direction of positive current flow in normal operation.

The pin connections for the 2N2219 (NPN) and 2N2905 (PNP) transistors used in this lab are shown in Fig. 6b. The **emitter** is the lead nearest to the tab on the BJT case. The **collector** is the lead diametrically opposite from the emitter. The **base** is the middle lead in between.[3] Note that the collector is connected to the case. Complete specifications for these BJT transistors can be found on their datasheets.

(a) Circuit symbols for NPN and PNP BJTs.

(b) Pinout diagram.

FIGURE 6. Bipolar junction transistors in circuits.

The physics of bipolar transistors is much more complicated than that of field-effect transistors, and we will not attempt to explain it here. Broadly speaking, BJTs are used in much the same way as FETs. The base corresponds to the gate, the emitter to the source, and the collector to the drain, and the base controls the current between the collector and the emitter, just like the gate voltage controls the current through the drain and source. The primary difference between the two is that the BJT base, unlike the FET gate, draws current in normal operation. In fact, the base-emitter junction looks like a forward-biased diode junction[4]. The base current makes BJT circuits and circuit analysis more complicated than FET circuits and circuit analysis. However, BJTs often have higher transconductance, smaller piece-to-piece variations, and, in some situations, lower noise than FETs.

For an NPN transistor, the collector voltage V_{C} must be held positive with respect to its emitter voltage V_{E}. If the base-emitter voltage V_{BE} is approximately equal to $+0.7\,\mathrm{V}$ (the diode turn-on voltage), current will flow between the collector and emitter, but relatively little current will flow through the base. Base-emitter voltages much less than $+0.7\,\mathrm{V}$ will shut the transistor off (no collector-emitter current), and base-emitter voltages much larger than $+0.7\,\mathrm{V}$ will cause excessive base current, and likely burn the transistor out. PNP transistors behave like NPN transistors, but with all the polarities inverted: $V_{\mathrm{C}} < V_{\mathrm{E}}, V_{\mathrm{BE}} < -0.7\,\mathrm{V}$, etc.

The BJT follower and push-pull circuits used in this lab can be analyzed by assuming that their transistors are off (nonconducting) when $|V_{\mathrm{BE}}|$ is less than $0.7\,\mathrm{V}$, and on (conducting) when $|V_{\mathrm{BE}}|$ is greater than $0.7\,\mathrm{V}$. More complicated circuits require more sophisticated transistor models. Very briefly, two such models are:

(1) *The BJT as a current amplifier*: the collector current I_{C} equals a constant β times the base current I_{B}, and the emitter current I_{E} equals $I_{\mathrm{B}} + I_{\mathrm{C}} = \left(1 + \frac{1}{\beta}\right) I_{\mathrm{C}}$. The value of β depends on the particular model of transistor and is typically in the range of 50 to 200.

(2) *The BJT as a transconductance amplifier*: $I_{\mathrm{C}} = I_s \exp(qV_{\mathrm{BE}}/kT)$, where I_s is a temperature-dependent constant for each transistor. This model is called the Ebers-Moll model and, with some additional bells and whistles, is the model used in SPICE.

[3] Unlike JFETs, whose leads are organized differently compared to their circuit diagram, BJT leads are oriented the same way!

[4] Compare this with the simple diode model we had for the JFET gate, which was reverse biased.

3. PRE-LAB QUESTIONS

P9.1) As mentioned in the lab background, the L356 op amp has a gain-bandwidth product GBW of around 5 MHz. What is the bandwidth of a non-inverting amplifier using this op amp that has a gain of 100 at DC?

P9.2) Design an amplifier using only LF356s and various resistors that uses only non-inverting amplifier stage(s), to achieve a bandwidth of 50 kHz and a gain of 10^4 at DC.

P9.3) I have a non-compensated op amp that has an open-loop gain of

$$A(\omega) = A_0 \left(\frac{1}{1 + j\frac{\omega}{\omega_0}} \right)^3$$

where $A_0 = 10^5$ and $\nu_0 = 10\,\text{MHz}$ (where $\omega_0 = 2\pi\nu_0$). At what frequency is the phase of this amplifier equal to π? If used in a unity gain follower, will this op amp oscillate?

4. LAB EXERCISES

Op amps are prone to oscillations. Please properly decouple the power supplies of any circuit incorporating op amps with 0.1 µF capacitors between the supplies and ground. You will not be helped without proper decoupling capacitors installed!

Problem L9.1 - Output Current Limitations. The effective output impedance of the follower shown in Fig. 7 is extremely low. However, that does **not** mean that it can drive low impedance loads. The low output impedance requires that **negative feedback is operational** with a high loop gain. However, the op amp can only source a **limited** amount of current. When satisfying the golden rules would require the op amp output to exceed this maximum output current or voltage, the output will **no longer** faithfully track the input.

Drive a follower with a 5 V amplitude, 1 kHz triangle wave. Starting with a load resistor of 2 kΩ, **decrease** the load resistor R_L until you see the effect of the op amp's finite output current. **Save** the resulting output. From the onset of current limit-induced distortions, **measure** the maximum and minimum (positive and negative) output currents. **Compare** your results with those shown in Fig. 8.

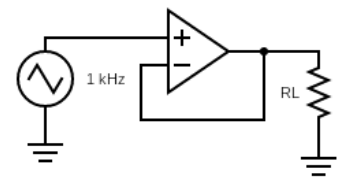

FIGURE 7. Op amp follower with load resistor.

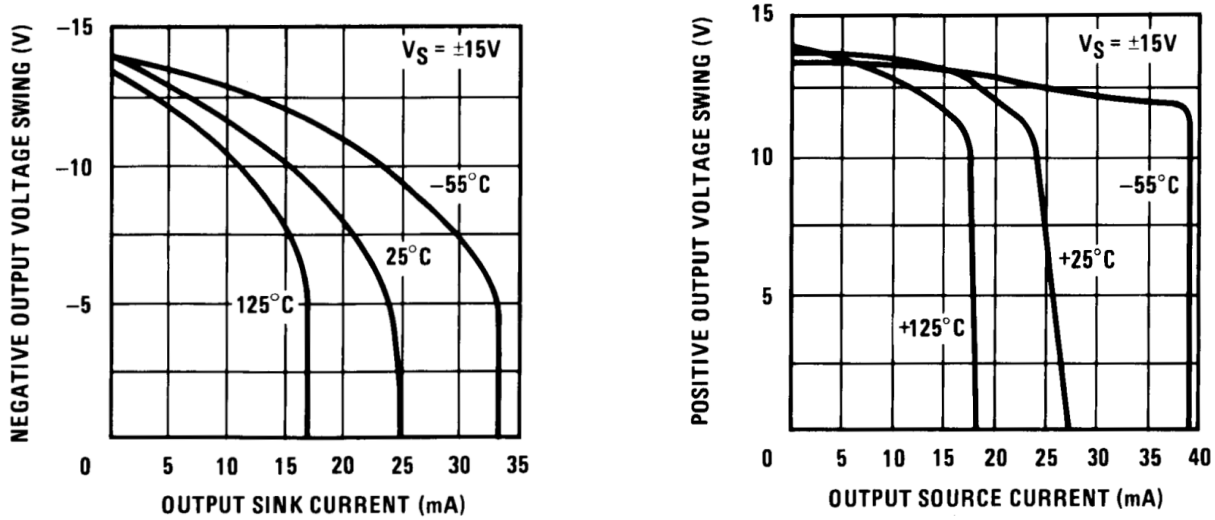

(a) Negative voltage swing.

(b) Positive voltage swing.

FIGURE 8. Op amp voltage swings as a function of output sink current at various temperatures (from the LF356 datasheet).

Problem L9.2 - Speaker Driver. In this exercise, you will drive the speaker that you used for the radio with the amplifier shown in Fig. 9. Handle the speaker **carefully**! The black-paper speaker cone tears easily. The impedance of the speaker is 16 Ω. The 33 Ω series resistor makes it so that the LF356 reaches its current limit at a higher input signal.

(a) Assuming that the op amp can output a maximum positive or negative current of 25 mA, **calculate** the maximum input signal amplitude before the output saturates[5]. **Calculate** the maximum power that can be delivered to the speaker. Does it depend on the **value** of the series resistor?

[5] Hint: note that the circuit uses negative feedback, and use Kirchhoff's current law.

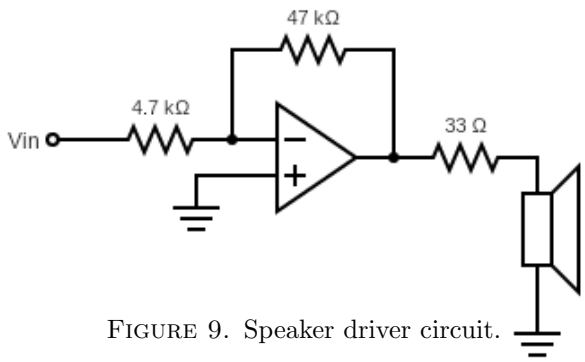

FIGURE 9. Speaker driver circuit.

(b) Connect Scope Channel 1 to V_{in} and Channel 2 to the output of the op amp. **Drive** the amplifier with 1 kHz sine, square, and triangle waves from the Wavegen and **observe** the output as a function of **signal amplitude**. **Measure** the maximum amplitude with which you can drive the speaker without saturation and **compare** the result with your calculation in (a).

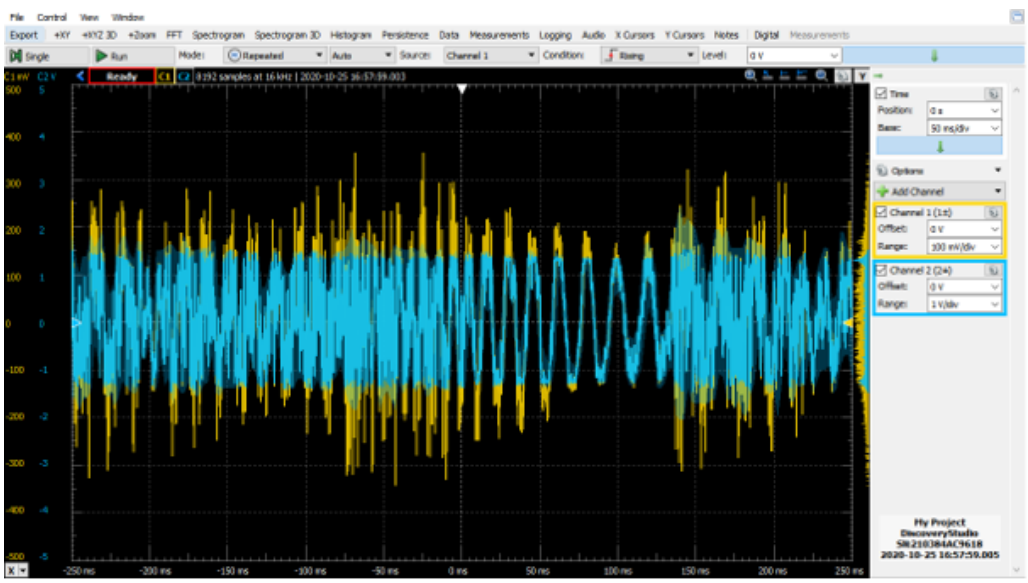

FIGURE 10. Saturating input and output for the speaker driver.

(c) Use the Wavegen to import and play a sound file. Click the gear icon next to Type and select Import to Play from the menu; this will allow you to select a downloaded audio file. If you are using Windows, you can play any MP3 file. If you are using a Mac, MP3 files won't work and you will need to play an uncompressed WAV file. If you don't have a file handy, you can use one of the files on bCourses. The Frequency should default to the sampling frequency of the MP3 file and will be between 16 and 320 kHz. You can adjust the maximum voltage amplitude of the output; start with an amplitude of 100 mV.[6] You may need to invert one of the scope channels to make the scope's readback of the input and output, apart from any distortion, overlap exactly. In order to get a long sample of the waveform, set the Time Base to 50 ms. Click on C2 in the upper left of the scope window to bring Channel 2 to the front of the display. This makes it easy to see when the output waveform distorts. **Increase** the amplitude while watching the input and output waveforms on the scope. Watch how the output waveform **degrades** and see if you can **hear** a corresponding decrease in audio quality. Unless your ears are very sensitive, you should be able to use a larger amplitude than you did with the sine wave. Large peaks in the audio output are rare and it is difficult to hear when only rare peaks are clipped. Fig. 10 shows the input and output traces overlayed when the output is saturating.[7]

[6] To facilitate comparison, it is convenient to scale the Range of the output channel by a factor of 10, so that the waveforms are identical but inverted.

[7] In this and subsequent exercises, you can improve the sound volume and quality markedly by mounting the speaker on an inside wall

Problem L9.3 - Bipolar Emitter Follower. The maximum output current delivered to the speaker can be increased by using the op amp to drive a bipolar transistor follower (Fig. 11). Be careful to install the 2N2219 transistor; check the part number! Many electronics components have the same packaging. In circuits like this where large currents can be delivered to loads, the transistors can dissipate significant heat. Installing one of the supplied heatsinks on the 2N2219 transistor, as shown in Fig. 12, will help keep it from burning out. The speaker will burn out if driven with a current above 350 mA (or equivalently, the peak power goes above 2 W). However, before that happens, the 200 mA average current for the ±12 V power supplies will be exceeded. Therefore, any circuit we design should not draw more than 200 mA average current from the supplies. We include the 33 Ω series resistor (ie, the resistor between the BJT emitter and the speaker) to limit the current that can be drawn from the power supplies.

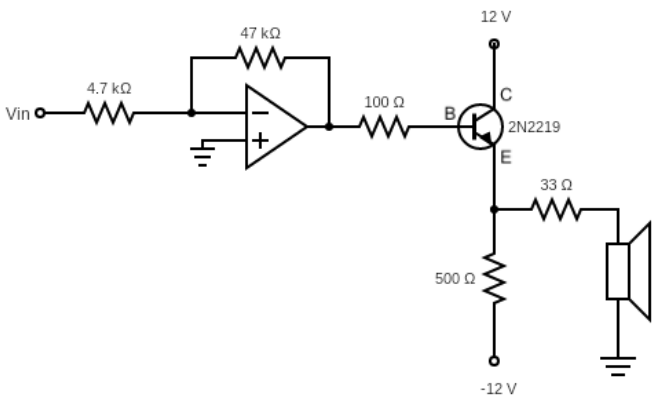

FIGURE 11. Emitter-follower circuit diagram. Note BJT pin-out!

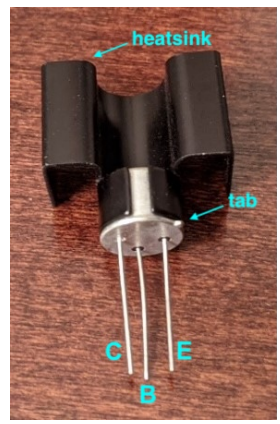

FIGURE 12. Heatsink-equipped BJT.

(a) Assuming that the maximum voltage output from the transistor is +10 V, **calculate the minimum series resistor** to guarantee that the peak current draw is less than 200 mA. Again, this refers to the series resistor between the BJT emitter and the speaker (shown in Fig. 11 as the 33 Ω resistor). We are being very conservative in limiting the peak, rather than average, current to 200 mA; we could use a slightly smaller resistor if we wish. What is the **RMS power dissipation** across this minimum value series resistor?[8] What is the **minimum** number of resistors we need to safely dissipate this power? **Show** that a 33 Ω resistor created from the parallel combination of three 100 Ω resistors roughly satisfies the conditions of (1) not exceeding the supply maximum current and (2) not dissipating too much power in the series resistors.

(b) **Build** the circuit in Fig. 11. Remember to use three 100 Ω resistors in parallel to construct the 33 Ω series resistor. Use the oscilloscope to **observe** how the output of the 2N2219 transistor emitter **differs** from the output of the op amp as the amplitude of a 440 Hz input sine wave is varied from 0.01 V to 1 V. **Measure** the DC offset of the 2N2219 emitter from the op amp output. Explain this in terms of the operation of the BJT transistor. Pick an input amplitude where the output is **significantly** distorted and **capture** a trace of the output. **Explain** the origin of any distortions.

(c) You should have seen from (b) that the resulting waveform is **asymmetric**. **Calculate** the most negative voltage that the transistor emitter can have, and **compare** it with your scope trace from (b).[9] **Explain** how this leads to the distortions in the output waveform. You might imagine that you could improve the performance by decreasing the value of the resistor from the emitter to −12 V to something like 33 Ω. For what reasons is this a **bad idea**?

(d) **Drive** the amplifier with a 1 kHz sine wave while varying the signal amplitude. Does the speaker sound like it is producing a **pure** sine tone at any amplitude? What is the sound quality when the amplifier is driven with an 1 V amplitude audio file?

of a cardboard box. Refer to the radio lab for instructions.

[8] Rememeber that the average power (RMS) dissipation for the resistors in your kit should not exceed 0.25 W, and that, for a sine wave signal, the RMS power is one-half of the peak power.

[9] Hint: Calculate what the voltage at the 33 Ω and 500 Ω junction would be if the transistor was removed from the circuit.

(e) Configure the Wavegen for a 1 kHz sine wave. Set the Amplitude to 100 mV and the Offset to −200 mV. Leaving the offset unchanged, **increase** the amplitude of the sine wave until you begin to see (and hear) **distortions** in the output waveform. **Measure** the maximum input signal amplitude that resorts in an undistorted output. **Explain** this maximum amplitude in terms of the circuit elements and the applied offset.[10] Remember that the amplifier is **inverting**!

(f) **Play** your audio file again with Amplitude set to 200 mV and the Offset to −200 mV. Configure the oscilloscope to look at the input signal and BJT emitter with a 50 ms Time Base. Do you notice any **change** in the quality of the output waveform and audio quality? **Increase** the Amplitude to 1 V and **note** any changes in the fidelity of the output waveform and audio quality. By adding a **negative** DC offset at the input, we have created a **positive** DC offset at the output of the op amp which allows the 2N2219 transistor to work over a broader range of output voltages. The downside of this is that when the input signal is zero, the transistor must still source a significant current across the speaker, resulting in inefficiency as extra power is dissipated in the circuit.

Problem L9.4 - Push-pull Driver. We can improve the output stage of the emitter follower in Fig. 11 by using a "push-pull" output stage instead, as shown in Fig. 13a. It uses a combination of NPN (2N2219) and PNP (2N2905) transistors to be able to source and sink current over a broad range of output voltages. It is efficient and does not draw a significant amount of current when the input signal is small.

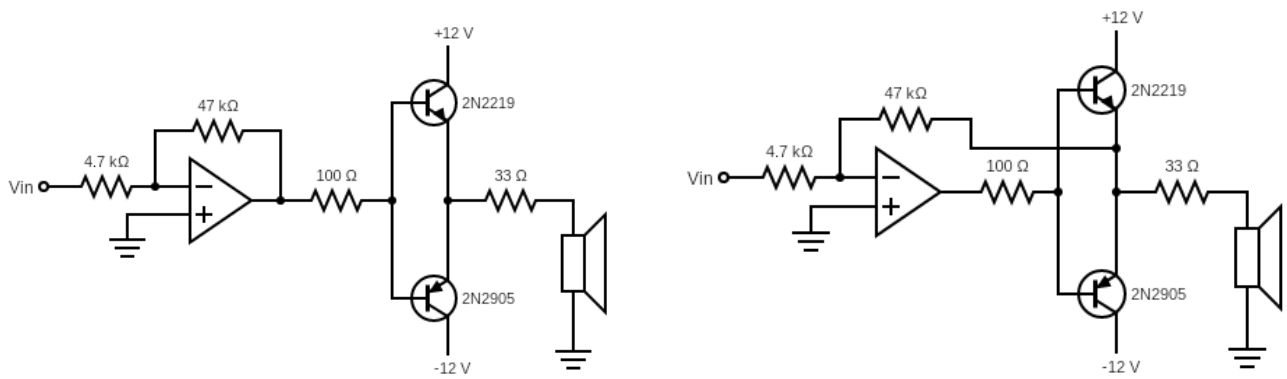

(a) Transistors outside feedback loop.

(b) Transistors inside feedback loop.

FIGURE 13. Push-pull driver circuit.

(a) **Build** the circuit shown in Fig. 13a. As in the emitter follower, use heatsinks on both the 2N2219 and 2N2905 transistors and use three 100 Ω resistors in parallel to build the 33 Ω series resistor. **Input** a 1 kHz sine wave with zero offset. Start with an input amplitude of 10 mV and **increase** it in increments of 10 mV until you start to see a signal at the output. **Measure** the minimum input signal required to produce an output and **explain** this result.

(b) Set the Amplitude to 150 mV. **Capture** the waveform at the output of the transistors. **Explain** what leads to the "cross-over" distortion when the input signal is near zero.

(c) Set the Amplitude to 1.5 V and **compare** the input and output waveforms. A new distortion should appear. What is the **cause** of this distortion?

(d) **Play** your audio file with a range of input amplitudes. Is there any amplitude or range of amplitudes for which the output sounds good? Focus on the distortion of the signal, not its volume.

[10] Also think about your results in (b.)

Problem L9.5 - Push-pull Driver in Feedback Loop. **Reconfigure** your circuit L9.4 so that the push-pull stage is inside the feedback loop as shown in Fig. 13b.

(a) **Input** a 1 kHz, 10 mV sine wave with zero offset. Does the circuit now **reproduce** low amplitude signals accurately? **Increase** the amplitude to 150 mV. The cross-over distortion that was present in in L9.4 should disappear. **Explain** how this circuit improves the response.[11]

(b) Now use your audio file as the input. **Compare** the input and output waveforms on the scope while listening to the output. **Increase** the amplitude from the smallest signal you can hear until the output becomes distorted and **comment** on the relative performance of the circuit. **Capture** a scope trace of the largest undistorted output signal.

Slightly more complicated push-pull amplifiers can be designed that have very little crossover or other distortion. Push-pull amplifiers are extremely common and are found everywhere from the output of op amps to the output of power stereo amps.

Problem L9.6 - Gain and Bandwidth. Build the 1000-gain inverting amplifier circuit shown in Fig. 14. We will measure this circuit's closed-loop gain as a function of frequency[12]. Because the gain of the amplifier is so large, it must be driven with a very small signal. The finite bit size of the Wavegen digitization results in waveforms that are not smooth at very low amplitudes. To combat this, we will use the voltage divider to reduce the 100 mV amplitude sine signal from the Wavegen to a 1 mV amplitude signal at the input to the amplifier. This results in a gain G of approximately $V_{\text{out}}/V_{\text{in}} \approx -10$ from the input to output of the circuit in the limit of infinite op amp gain.

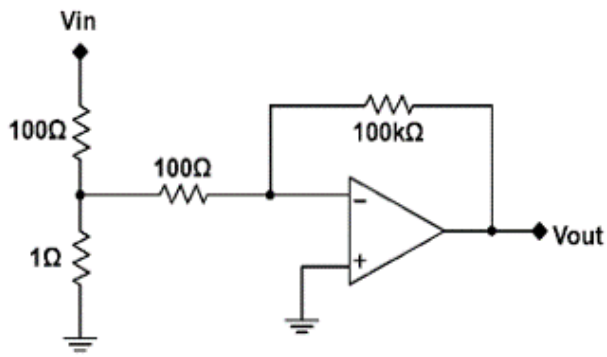

FIGURE 14. Inverting amplifier with voltage divider input.

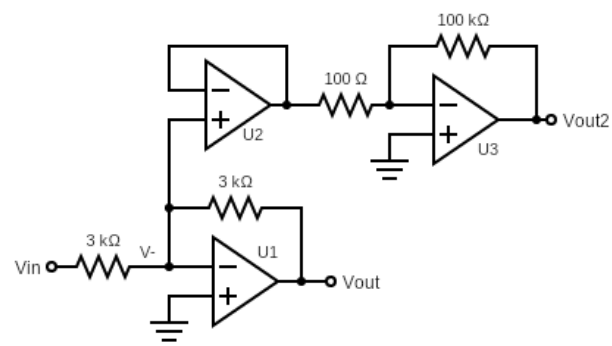

FIGURE 15. Measuring open-loop gain.

(a) First, we will **measure** the gain-bandwidth product of the op amp. Connect Scope Channel 1 to V_{in} and Scope Channel 2 to V_{out}. Using a 100 mV signal, obtain a **gain curve** for the amplifier (a range of 100 Hz to 100 kHz should be fine). Determine the $f_{3\,\text{dB}}$, where the gain falls by 3 dB[13]. **Calculate** the gain-bandwidth product (GBW) for the op amp, and **compare** this with your expectation for the LF356 used in this configuration.

(b) **Change** the feedback resistor from 100 kΩ to 10 kΩ. What is the **expected** gain $G = V_{\text{out}}/V_{\text{in}}$ in this configuration? Using an 1 V wave, obtain a gain curve over the frequency range from 1 kHz to 1 MHz. Again, measure the 3 dB frequency, and **calculate** the GBW product for the op amp in this new configuration.

(c) **Change** the 100 Ω resistor connected to the inverting input to 1 kΩ, but leave the 10 kΩ feedback resistor unchanged. Since now the maximum gain is only 10, we won't need the voltage divider anymore. **Remove** the voltage divider and drive the inverting input directly with the Wavegen. **Restore** the Network analyzer amplitude to 100 mV and obtain a gain curve over the frequency range from 10 kHz to 1 MHz. **Measure** the 3 dB frequency, and calculate the GBW product for the op amp. Why **can't** you just multiply G and f_{3dB} like you did in (a) and (b)?

[11] Hint: This is the same principle we used to improve amplifier performance in exercises L7.6.

[12] Recall that closed-loop gain means the gain at the output with feedback applied.

[13] Recall that, when determining the 3 dB point, we measure the frequency at which the gain decreases by 3 dB (or a factor of $1/\sqrt{2}$) from its maximum value, which may not necessarily be unity.

Problem L9.7 - Differentiator. In this exercise, we build a differentiator op amp circuit.

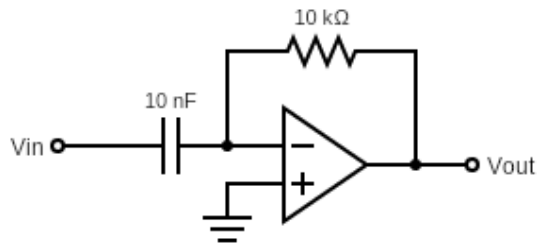

(a) Simple differentiator.

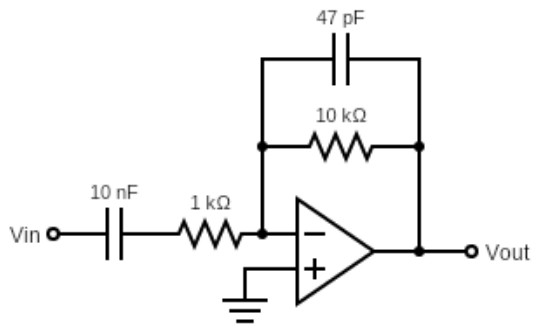

(b) Improved differentiator.

FIGURE 16. Differentiator circuits.

(a) **Show**, in the time domain and using the golden rules (i.e. infinite op amp open loop gain), that the output of the circuit shown in Fig. 16a is proportional to the derivative of the input:

$$V_{\text{out}} = -RC\frac{\mathrm{d}V_{\text{in}}}{\mathrm{d}t}$$

(b) **Show** the same conclusion, instead by calculating the transfer function in frequency space in the infinite gain limit.

(c) **Calculate** the transfer function for Fig. 16a, now for a compensated op amp with open-loop gain given by

$$A(\omega) = \frac{A_0}{1 + j\omega/\omega_0} \tag{1}$$

Define $\beta(\omega) = Z_C/(R + Z_C)$ where R is the feedback resistor and Z_C is the impedance of the capacitor. **Plot** $|A(\omega)\beta(\omega)|$ and its phase as a function of frequency [14]. You may assume $\omega/\omega_0 \gg 1$. Also recall that GBW $= A_0\omega_0/2\pi$. According to the Nyquist stability criterion, is this circuit stable? In other words, are there frequencies ω at which the phase of $A(\omega)\beta(\omega)$ is near $-180°$ but the magnitude of $A(\omega)\beta(\omega)$ is greater than 1?

(d) **Construct** the differentiator with the component values shown in Fig. 16a. Ground the input and look at the output. Unfortunately, the circuit is unusable in its current form and can **oscillate** spontaneously.[15] **Measure** this oscillation or ringing frequency, i.e. the fast frequency at which the circuit output rings in response to an input square wave. **Why** does the circuit oscillate? What **property** of the op amp makes the circuit **unstable**?[16]

(e) We can **modify** the differentiator to make it stable. **Build** the practical differentiator shown in Fig. 16b. If your kit does not have a 47 pF capacitor, you can substitute the closest capacitor you have. Why does it **no longer** oscillate? Drive the input with a 100 mV amplitude, 10 kHz sine and square waves and **qualitatively explain** the observed output.

(f) Functionally, this circuit acts as a bandpass filter. Assuming that the low-pass and high-pass frequencies are widely separated, what is the **gain** in the pass band? In this limit, **calculate** the high-pass and low-pass 3 dB frequencies. **Perform** a Network Analysis over the frequency range from 100 Hz to 1 MHz with a 100 mV[17]. Measure the 3 dB frequencies and compare them with your calculation. The 47 pF capacitor is not necessary in this circuit. **Remove** it, repeat the network analysis, and measure the new low-pass 3 dB point? What is the **cause** of this roll-off?

[14] See the appendix for more explanation about the importance of this quantity.
[15] If it doesn't oscillate, try driving it with a **square** wave of an amplitude of 100 mV and frequency 10 kHz, and you should see it ring!
[16] Hint: what is the phase shift of the op amp at the oscillation frequency? What is the phase shift of the feedback network? Together, how do these phase shifts lead to the differentiator becoming unstable?
[17] If we used the default 1 V amplitude, the output would saturate.

Problem L9.8 - LF356 Noise. In this exercise, we will measure the noise of the LF356 op amp. The noise of most op amps above 100 Hz is *white noise*, meaning that, in Fourier space, there is an equal amount of noise power in all frequencies bins. The Johnson noise across a resistor is also white noise, and has this same property of constant *power spectral density* (PSD). For the LF356, the noise PSD begins to rise as $1/f$ below 100 Hz and is plotted on the LF356 data sheet.

Measurements of noise typically refer to the equivalent noise at the input of the circuit, denoted e_n. If the circuit has a gain G and you measure noise of amplitude V_n at the output, the equivalent noise at the input would be the noise at the output divided by the gain: $e_n = V_n/G$. Any subsequent contributions to noise in the circuit are also divided by the gain of that amplifier. In multi-stage amplifiers where the first stage is an amplifier with high gain, all subsequent noise contributions are typically negligible.

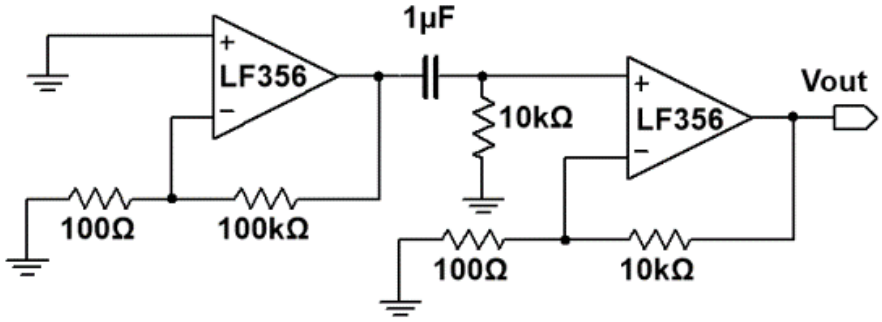

FIGURE 17. Circuit measuring LF356 noise.

The noise of the LF356 is low. This is great when we want to use it in applications, but it also makes measuring the noise itself difficult, and we will need an amplifier with high gain to make it large enough to measure. In the circuit in Fig. 17, we use two amplifier stages, with gains of 1000 and 100, respectively.

When building a high-gain amplifier, we need to be aware of the effect of input offset voltages. The input offset voltage V_{OS} of the LF356 has a typical value of 3 mV. After the first stage, this offset will be amplified so much that the signal can no longer be amplified further without saturating the output. To fix this, we add a high-pass filter between the amplifier stages to remove the DC offset. The DC output voltage will now be just be $G \times V_{\mathrm{OS}}$ for the second stage, which will be acceptably low and not saturate the output.

(a) First, **study** the circuit shown in Fig. 17. This circuit provides high gain for signals over a range of frequencies. What is the **nominal total gain** of this amplifier, i.e. the gain from the op amp resistor ratios? In L9.6, you observed that the gain of a 1000-gain amplifier falls off above some measured frequency; effectively, the amp functions as a low-pass filter.[18] What is the 3 dB frequency for the high-pass filter between the filter stages? What is the **approximate bandwidth** of the amplified signals, i.e. the range between the low-pass and high-pass frequencies?

(b) In order to characterize the noise as a function of frequency, we take a Fourier transform of the output.[19] **Build** the circuit[20], and connect Scope Channel C1 to the output of the amplifier. Measure the frequency spectrum from 100 Hz to 50 kHz. Check the box next to Magnitude and set Units to $\tilde{\mathrm{V}}/\sqrt{\mathrm{Hz}}$, which corresponds to RMS volts per $\sqrt{\mathrm{Hz}}$. To **improve** the signal-to-noise ratio of the measurement, you can average many measurements: in the box for Channel 1, set Type to Linear Average and set the Count to 100. It will take a few minutes to average 100 traces. This should result in a high signal-to-noise measurement like that shown in Fig. 18. **Save** this plot.

[18] The roll-off frequency of the 100-gain stage will be higher than the roll-off frequency of the 1000-gain stage and can be ignored.
[19] Recall that we can take Fourier transforms with the Spectrum function of the ADS.
[20] If you don't have a 1 µF capacitor, ask a neighbor or the GSIs for one, and don't forget to give it back!

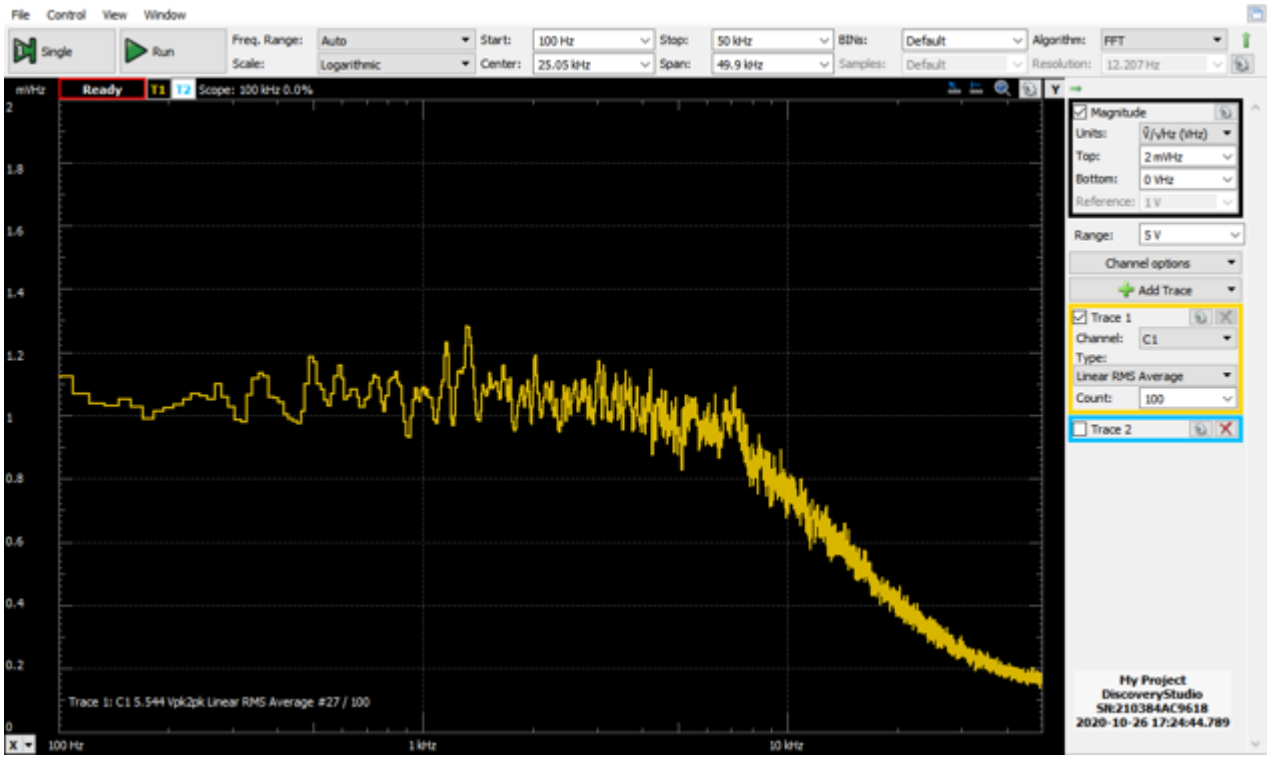

FIGURE 18. Amplified noise spectrum of the LF356.

(c) **Measure** the noise in the vicinity of 100 Hz and 1 kHz. Try to visually average near each frequency, not just the exact values at the two frequencies; even with the averaging, the noise measurement will vary. **Compare** your measurement of the op-amp's input voltage noise with the noise performance specified in the LF356 data sheet: $e_n = 15\,\mathrm{nV}/\sqrt{\mathrm{Hz}}$ at 100 Hz and $e_n = 12\,\mathrm{nV}/\sqrt{\mathrm{Hz}}$ at 1 kHz. Is your measured input voltage noise consistent with the datasheet? Note the units![21]

(d) From your measured power spectral density, you can estimate the bandwidth of your noise by measuring where the noise amplitude decreases by 3 dB. This bandwidth should be close to the bandwidth you calculated above from the high- and low-pass frequencies. For white noise, the expected RMS voltage noise over this bandwidth (BW) is $V_{\mathrm{RMS}} = e_n \times \sqrt{\mathrm{BW}}$. Use your measured power spectrum to **estimate** the RMS voltage. Open the Scope and use the Measurements function to **determine** the AC RMS voltage and compare with your results.

[21] The noise in the data sheet is specified in units of peak voltage ($\mathrm{V}/\sqrt{\mathrm{Hz}}$) but the ADS measurement is listed in terms of RMS voltage ($\tilde{\mathrm{V}}/\sqrt{\mathrm{Hz}}$). How do we take this into account? Hint: you did this conversion from RMS to peak-to-peak in Lab 1!

Problem L9.9 - Active Half-Wave Rectifier. Passive diode rectifying circuits like that in Lab 4.7 are not exactly accurate because of the 0.6 V diode turn-on voltage. Better rectifying circuits can be constructed with op amps but are complicated by finite slew rates, as we will see in this problem.

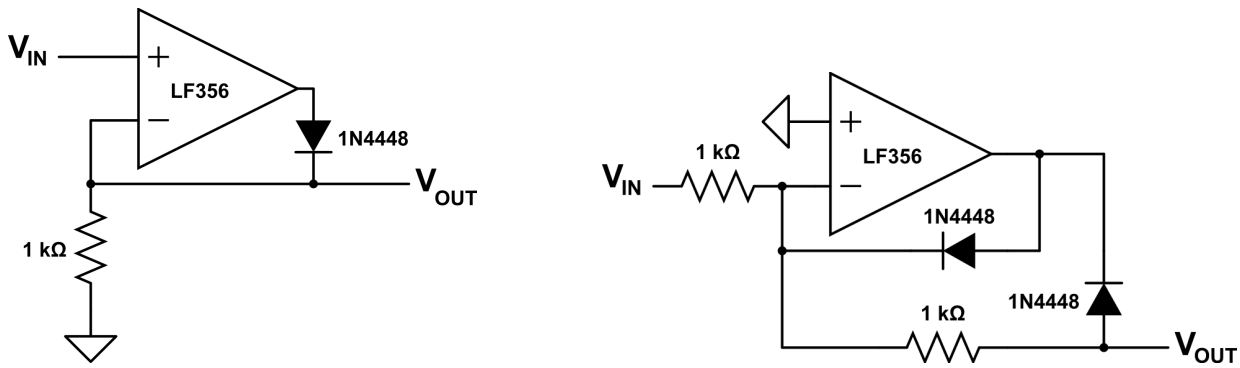

(a) Simple active rectifier.

(b) Improved rectifier.

FIGURE 19. Active rectifier circuits.

(a) **Build** the simple active rectifier circuit shown in Fig. 19a. **Drive** it with a 1 V amplitude 1 kHz triangle wave. Measure V_{in} and V_{out} with your scopes. The output should accurately **reproduce** the positive portion of the waveform. How does this circuit avoid the diode drop that occurred in our passive rectifier?

(b) **Increase** the triangle wave frequency to 100 kHz. You should see that the output is now **distorted** with a chunk missing on the leading edge of the output waveform. **Save** an image of your scope trace showing this distortion. Now, **measure** V_{out} and the op amp output with your scopes. What is the **output voltage** of the op amp when the input waveform is negative? **Explain** how the finite slew rate of the op amp degrades the performance of the circuit.

(c) The circuit shown in Fig. 19b **reduces** cross-over distortions due to the LF356's finite slew rate. It achieves this by providing an active feedback path for the op amp **at all times**. When V_{in} is **negative**, what is the voltage at the output of the op amp? When V_{in} is **positive**, what is the voltage at the output of the op amp? **Explain** how this reduces cross-over distortion due to finite slew rate.

(d) **Build** the circuit in Fig. 19b and **compare** the performance for a 1 V amplitude triangle drives at 1 kHz and 100 kHz with the performance you observed in (a) and (b). For 100 kHz, **save** an image for your scope trace with the input and output waveforms overlaid, and another scope trace with the output waveform and op amp output overlaid. **Compare** with your expectations from (c).[22]

[22] Although improved, this circuit has two significant limitations. One is that the output impedance is not constant. This will lead to distortions when driving a load. The second is that it is a half-wave rectifier and only acts on half of the waveform. The absolute value circuit you built in Lab 8 solves both of these problems.

A. FREQUENCY-DEPENDENT CLOSED-LOOP GAIN

Let's assume that we are running a compensated op-amp whose open loop gain, $A(\omega)$ has this functional form

$$A(\omega) = A_0 \frac{1}{1 + j\frac{\omega}{\omega_0}} \left(\frac{1}{1 + j\frac{\omega}{\omega_{\text{amp}}}} \right)^n \tag{A.2}$$

where ω_0 is the 3 dB angular frequency of the low-pass compensation filter and ω_{amp} is the 3 dB cutoff of each amplification stage of the op amp, which are due to the parasitic capacitances of the transistors that compose that stage. n is the number of amplification stages that the op amp has. $f_0 \equiv \frac{\omega_0}{2\pi} \simeq 10\,\text{Hz}$ while $f_{\text{amp}} \equiv \frac{\omega_{\text{amp}}}{2\pi} \simeq 10\,\text{MHz}$. This huge difference in frequency scale between ω_0 and ω_{amp} means that as long as $\omega \lesssim \frac{\omega_{\text{amp}}}{3}$, the op amp open-loop gain can be approximated solely by the compensation pole only:

$$\lim_{\omega \lesssim \frac{\omega_{\text{amp}}}{3}} A(\omega) = A_0 \frac{1}{1 + j\frac{\omega}{\omega_0}} \tag{A.3}$$

A.1. **Inverting Op Amp Amplifier Configuration with Compensation.** In lab 7, we explicitly and carefully derived the finite gain calculation for the inverting amplifier seen in Fig. 20. Here we basically redo this calculation line for line, except now the op amp open-loop gain is just a function of frequency, $G(\omega)$ (Eq. A.3), instead of constant.

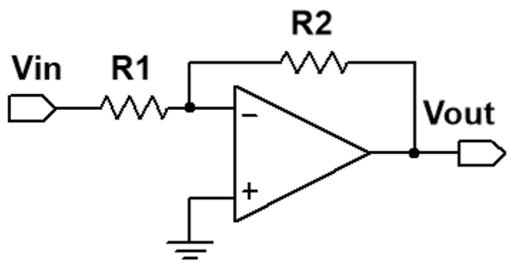

FIGURE 20. Op amp inverting amplifier

To find $V_{\text{out}}/V_{\text{in}}$, we must solve three equations for three unknowns: V_-, I_-, and V_{out}. First, we have our the differential gain equation for the op amp:

$$V_{\text{out}} = A(\omega)(\cancelto{0}{V_+} - V_-) = -A(\omega)V_- \tag{A.4}$$

where we've taken into account that V_+ is explicitly grounded for this amplifier geometry. Additionally, we know that

$$V_{\text{in}} - V_{\text{out}} = I_-(R_1 + R_2) \tag{A.5}$$

$$V_- = V_{\text{in}} - I_- R_1 \tag{A.6}$$

where positive I_- is to the right. Solving these three equations for V_{out} we find that

$$\left(1 + A(\omega)\frac{R_1}{R_1 + R_2}\right) V_{\text{out}} = -A(\omega)\frac{R_2}{R_1 + R_2} V_{\text{in}} \tag{A.7}$$

where it's traditional to define the feedback coupling network β as $\beta = \frac{R_1}{R_1+R_2}$ and $\gamma = \frac{R_2}{R_2+R_1}$.

Ideally, we would like to divide Eq. A.7 by the prefactor $1 + A(\omega)\beta$ to isolate $\frac{V_{\text{out}}}{V_{\text{in}}}$, but since $A(\omega)$ now has phase shifts and frequency dependence, we must explicitly check that

$$1 + A(\omega)\beta \neq 0 \implies A(\omega)\beta \neq -1 \tag{A.8}$$

at any frequency. If it is, this means that V_{out} can be non-zero (i.e. there is an output oscillation), even when there is no input signal, ($V_{\text{in}} = 0$). In other words, the circuit will *self-oscillate*.

In fact, though it isn't obvious from the equation, this feedback circuit will oscillate whenever

$$|A(\omega_\pi)\beta(\omega_\pi)| \geq 1$$

where ω_π is the frequency where the phase of $A(\omega)\beta(\omega) = \pi$. This is called the *Nyquist stability criterion*. The Nyquist stability criterion can be recast in terms of the ideal closed-loop gain, $G_C^{\text{ideal}} = -\frac{R_2}{R_1}$:

$$\left| A(\omega)\frac{1}{1 - G_c^{\text{ideal}}} \right| < 1 \tag{A.9}$$

Notice that the bigger the closed-loop gain, the more stable the circuit! High-gain closed loop amplifiers are always more stable (and we'll find are also slower) than low-gain amplifiers, like unity-gain buffer amplifiers or followers.

With the stability understood, we can now continue calculating the gain for the op amp. Rearranging Eq. A.7, we have

$$\begin{aligned} H(\omega) = \frac{V_{\text{out}}}{V_{\text{in}}} &= -\frac{A(\omega)\frac{R_2}{R_1+R_2}}{1 + A(\omega)\frac{R_1}{R_1+R_2}} \\ &= -\frac{R_2}{R_1}\frac{A(\omega)}{1 + \frac{R_2}{R_1} + A(\omega)} \\ &= G_c^{\text{ideal}}\frac{A(\omega)}{1 - G_c^{\text{ideal}} + A(\omega)} \end{aligned} \tag{A.10}$$

when expressed in terms of G_c^{ideal}.

Finally, let's assume that the op amp is compensated and therefore $A(\omega)$ can be simplified to having a single pole, and thus has the form given in Eq. A.3. Plugging this in, we obtain

$$H(\omega) = \frac{-R_2}{R_1}\frac{A_0}{1 + \frac{R_2}{R_1} + A_0}\frac{1}{1 + j\frac{\omega}{\omega_f}}, \quad \omega_f \equiv \omega_0 \frac{1 + \frac{R_2}{R_1} + A_0}{1 + \frac{R_2}{R_1}} \tag{A.11}$$

Notice that when $\omega = \omega_f$, the gain drops by a factor of $\sqrt{2}$, meaning that ω_f is the 3 dB frequency.[23] Simplifying Eq. A.11 in the usual limit where the DC op amp open loop gain $A_0 \gg |G_c^{\text{ideal}}| = \frac{R_2}{R_1}$, the middle term goes to one and Eq. A.11 simplifies to

$$\begin{aligned} H(\omega) &\approx \frac{-R_2}{R_1}\frac{1}{1 + j\frac{\omega}{\omega_f}} \\ &= G_c^{\text{ideal}}\frac{1}{1 + j\frac{\omega}{\omega_f}} \end{aligned} \tag{A.12}$$

and our expression for ω_f simplifies to

$$\begin{aligned} \omega_f &\approx \frac{\omega_0 A_0}{1 + \frac{R_2}{R_1}} \\ &= \frac{\omega_0 A_0}{1 - G_c^{\text{ideal}}} \end{aligned} \tag{A.13}$$

Notice that the rolloff of the amplifier solely depends upon the open-loop gain-bandwidth product GBW $= G_0 f_0$ and the ideal closed-loop gain G_c^{ideal}. Furthermore, you can now see that the bigger the magnitude closed-loop gain is, the lower the bandwidth of the amplifier (i.e. makes it slower). A 1000-gain amplifier will have about a smaller bandwidth by a factor of 100 compared to a 10-gain amplifier. Thus, if you want to have both high gain and high bandwidth, you will likely need to use

- multiple op amp amplifier stages
- high-GBW op amps or perhaps even uncompensated op amps

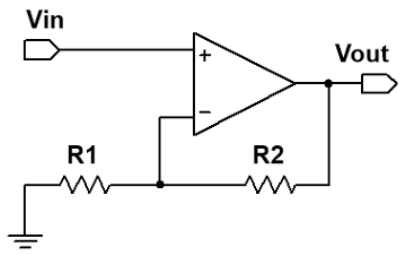

FIGURE 21. Op amp non-inverting amplifier circuit

A.2. **Non-Inverting Op Amp Amplifier Configuration with Compensation.** For the non-inverting amplifier configuration (Fig. 21), the two equations that we need to solve for V_{out} and V_- are

$$V_{\text{out}} = A(\omega)\left(V_{\text{in}} - V_-\right) \tag{A.14}$$

where we've already accounted for V_{in} being directly connected to V_+, and

$$V_- = \frac{R_1}{R_1 + R_2} V_{\text{out}} \tag{A.15}$$

$$= \beta V_{\text{out}} \tag{A.16}$$

Replacing V_- in Eq. A.14 with Eq. A.16 we find

$$\left(1 + A(\omega)\beta\right) V_{\text{out}} = A(\omega) V_{\text{in}} \tag{A.17}$$

Interestingly, the Nyquist stability criterion is the same as in the inverting amplifier geometry:

$$|A(\omega_\pi)\beta(\omega_\pi)| < 1, \quad \arg\left(A(\omega_\pi)\beta(\omega_\pi)\right) = \pi \tag{A.18}$$

The reason for this is that stability doesn't depend on V_{in}; it only depends on the op amp and the feedback circuit. Thus, if V_{in} is connected to V_+ (a non-inverting amplifer) or to the V_- through R_1 (an inverting amplifier), the oscillation dynamics are the same.

The ideal closed-loop gain G_c^{ideal} for the non-inverting amplifier geometry is $1 + \frac{R_2}{R_1}$. Rearranging Eq. A.17 further, the closed loop gain is

$$H(\omega) = \frac{V_{\text{out}}}{V_{\text{in}}} = \frac{A(\omega)}{1 + A(\omega)\beta}$$

$$= G_c^{\text{ideal}} \frac{A(\omega)}{G_c^{\text{ideal}} + A(\omega)} \tag{A.19}$$

Again assuming that the op amp is compensated and $G(\omega)$ has the form in Eq. A.3, we find that

$$H(\omega) = G_c^{\text{ideal}} \frac{A_0}{G_c^{\text{ideal}} + A_0} \frac{1}{1 + j\frac{\omega}{\omega_c}}, \quad \omega_c \equiv \omega_0 \left(1 + \frac{A_0}{G_c^{\text{ideal}}}\right) \tag{A.20}$$

Just as in the inverting amplifier, note that when $\omega = \omega_c$, the gain falls by a factor of $\sqrt{2}$; therefore ω_c is the 3 dB roll-off frequency. Again assuming that the $G_0 \gg G_c^{\text{ideal}} = 1 + \frac{R_2}{R_1}$,

$$\omega_c = \frac{\omega_0 A_0}{G_c^{\text{ideal}}} \tag{A.21}$$

[23] If you haven't done this already, you should show that, for a transfer function of the form $H(\omega) = \frac{A}{1+j\frac{\omega}{\omega'}}$, the 3 dB frequency is ω'.

Negative feedback increases the amplifier bandwidth compared to the open-loop amplifier. Just as with the inverting amplifier configuration, the bigger the closed loop gain, the smaller the bandwidth of the closed loop amplifier. Likewise, just as before, we find that the GBW is an incredibly important op amp specification:

$$G_c^{ideal}\omega_c = A_0\omega_0 = \text{GBW}2\pi \tag{A.22}$$

One can determine the closed-loop amplifier bandwidth just by knowing the GBW and the DC closed loop gain.